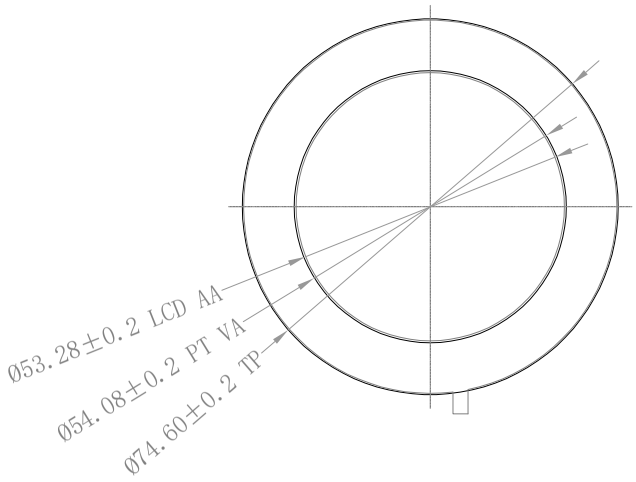

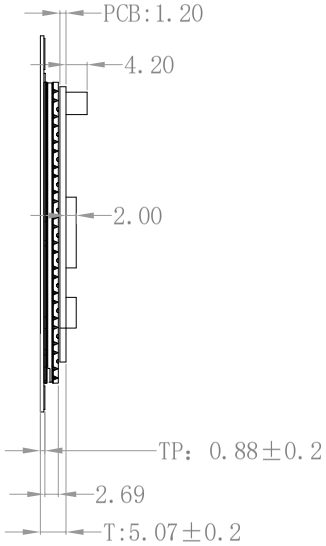

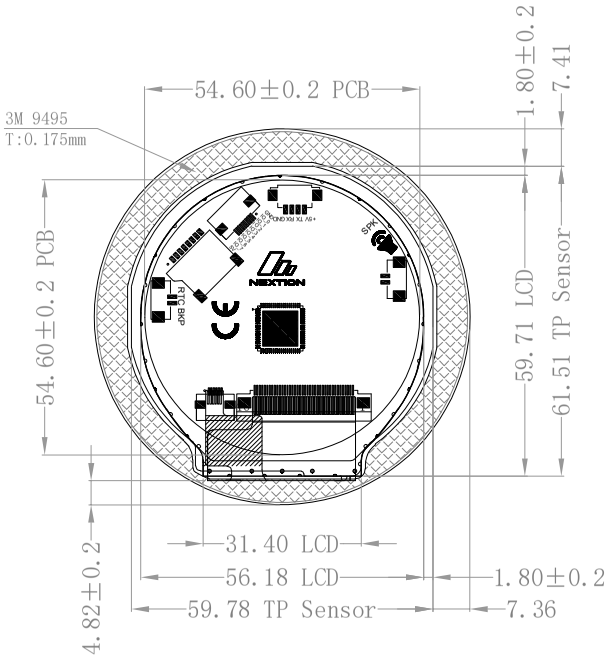

NEXTION				UNIT: mm
PRODUCT	DWN			
NO. NX4848E021_011C	CHK			
	APP			TOLERANCES: ±0.2mm
REWVISON:2.0				